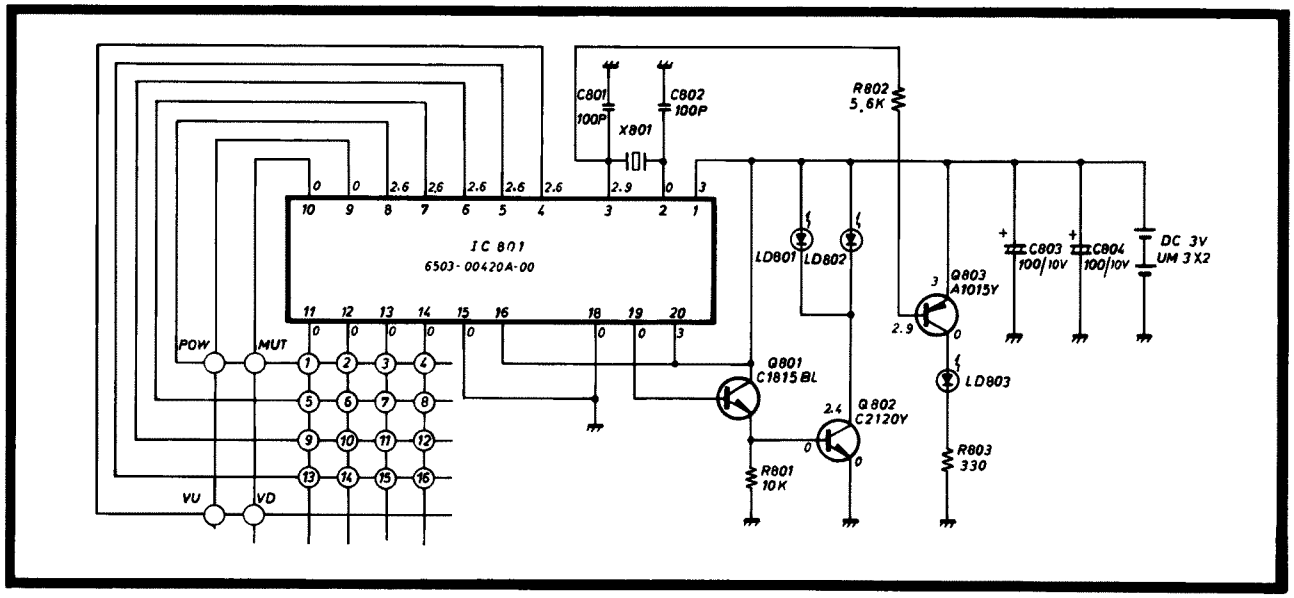
IC 801
6503-00420A-00
C801
100P
C802
100P
X801
R802
5.6K
LD801
LD802
Q803
A1015Y
C803
100/10V
C804
100/10V
DC 3V
UM 3X2
LD803
Q801
C1815BL
Q802
C2120Y
R801
10K
R803
330
POW
MUT
VU
VD

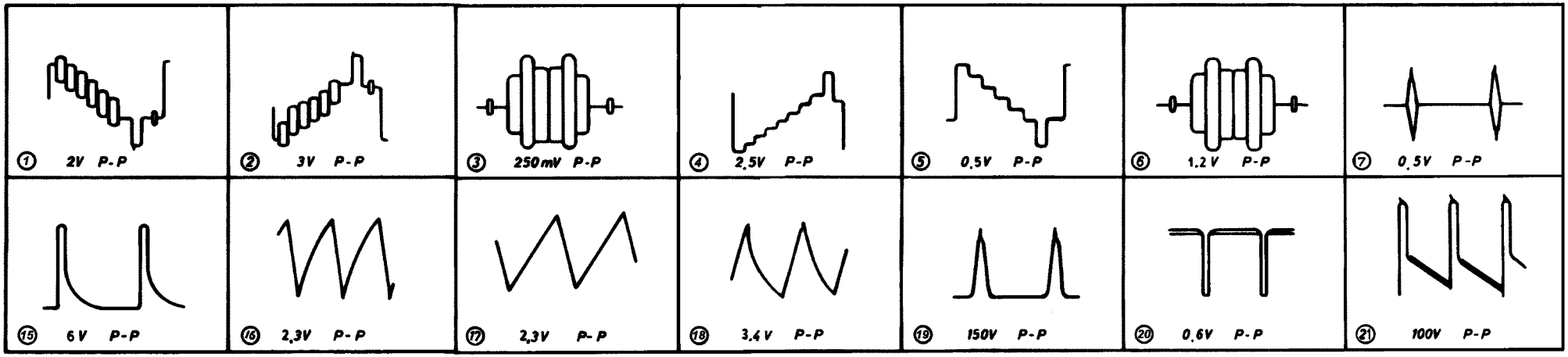
1 2V P-P
2 3V P-P
3 250mV P-P
4 2.5V P-P
5 0.5V P-P
6 1.2V P-P
7 0.5V P-P
15 6V P-P
16 2.3V P-P
17 2.3V P-P
18 3.4V P-P
19 150V P-P
20 0.6V P-P
21 100V P-P

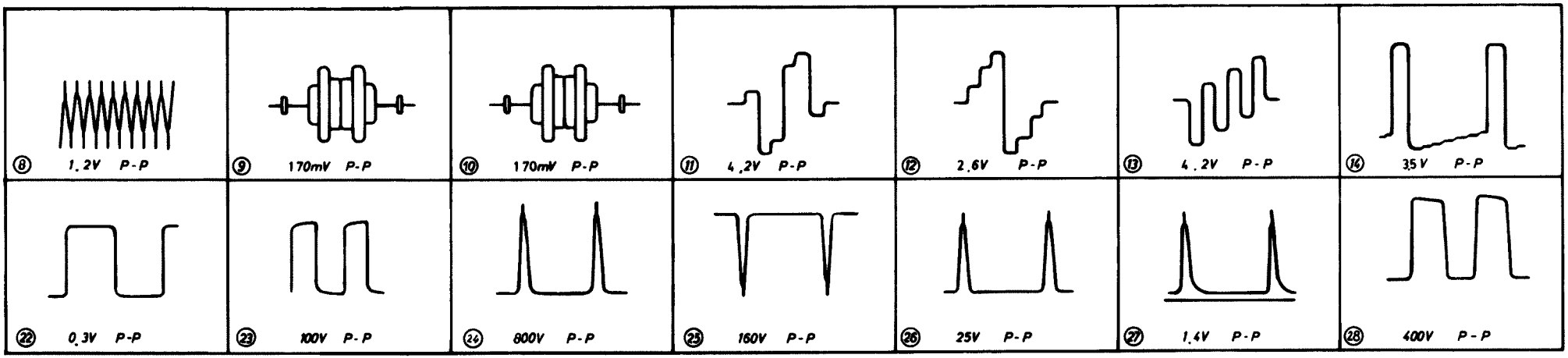
8 1.2V P-P
9 170mV P-P
10 170mV P-P
11 4.2V P-P
12 2.6V P-P
13 4.2V P-P
14 3.5V P-P
22 0.3V P-P
23 100V P-P
24 800V P-P
25 160V P-P
26 25V P-P
27 1.4V P-P
28 400V P-P

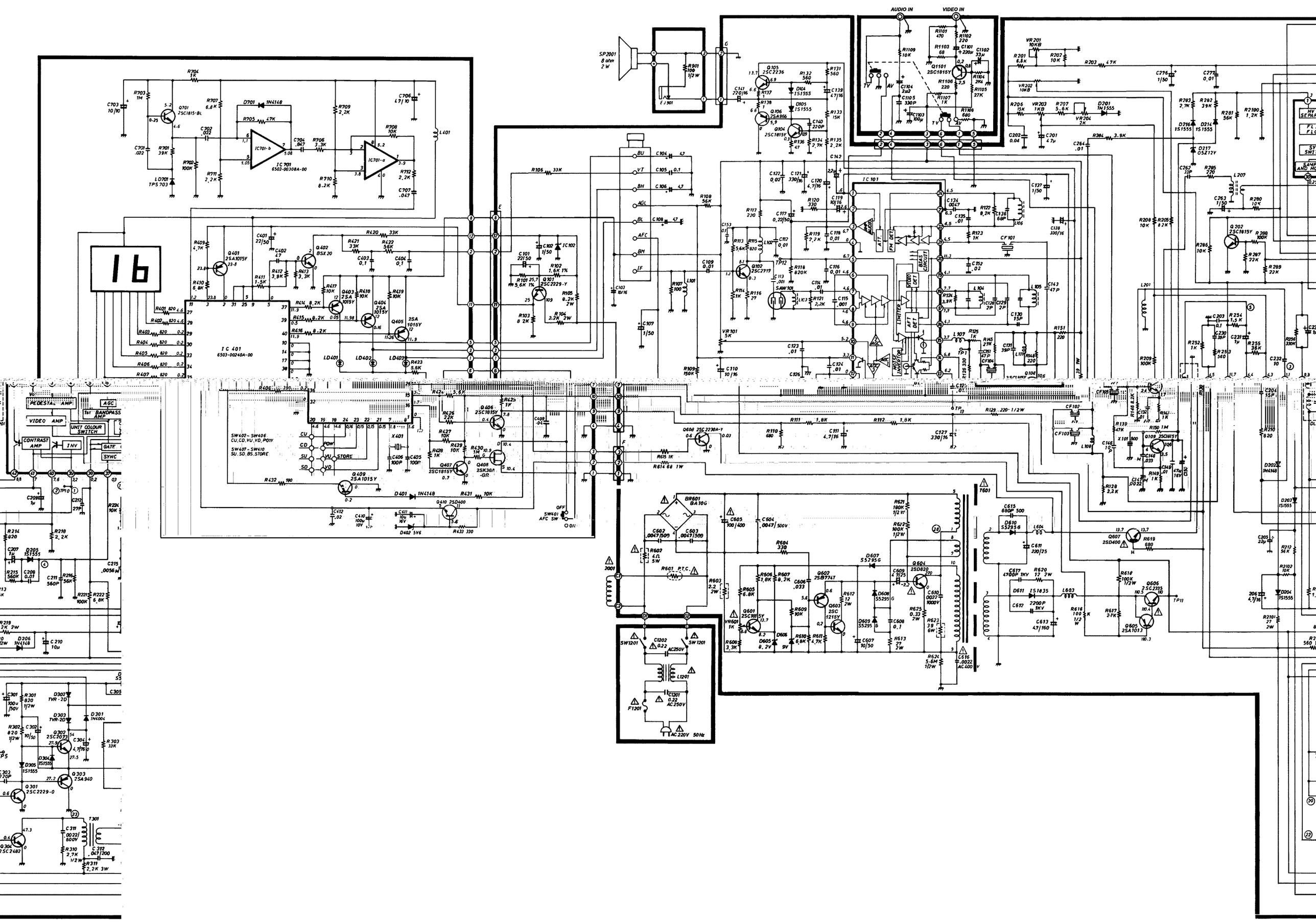
16
IC 401
6503-00240A-00
IC 201
6503-00308A-00
IC 101
AUDIO IN
VIDEO IN
SP2001
8 ohm
2 W
PEDESTAL AMP
AGC
1st BANDPASS AMP
VIDEO AMP
UNIT COLOUR SWITCH
CONTRAST AMP
INV
GATE
SYNC
SW402 - SW406
CU, CD, VU, VD, POW
SW407 - SW410
SU, SD, BS, STORE
BR601
BA10G
AC220V 50Hz
AC250V
OFF
AFC SW
ON

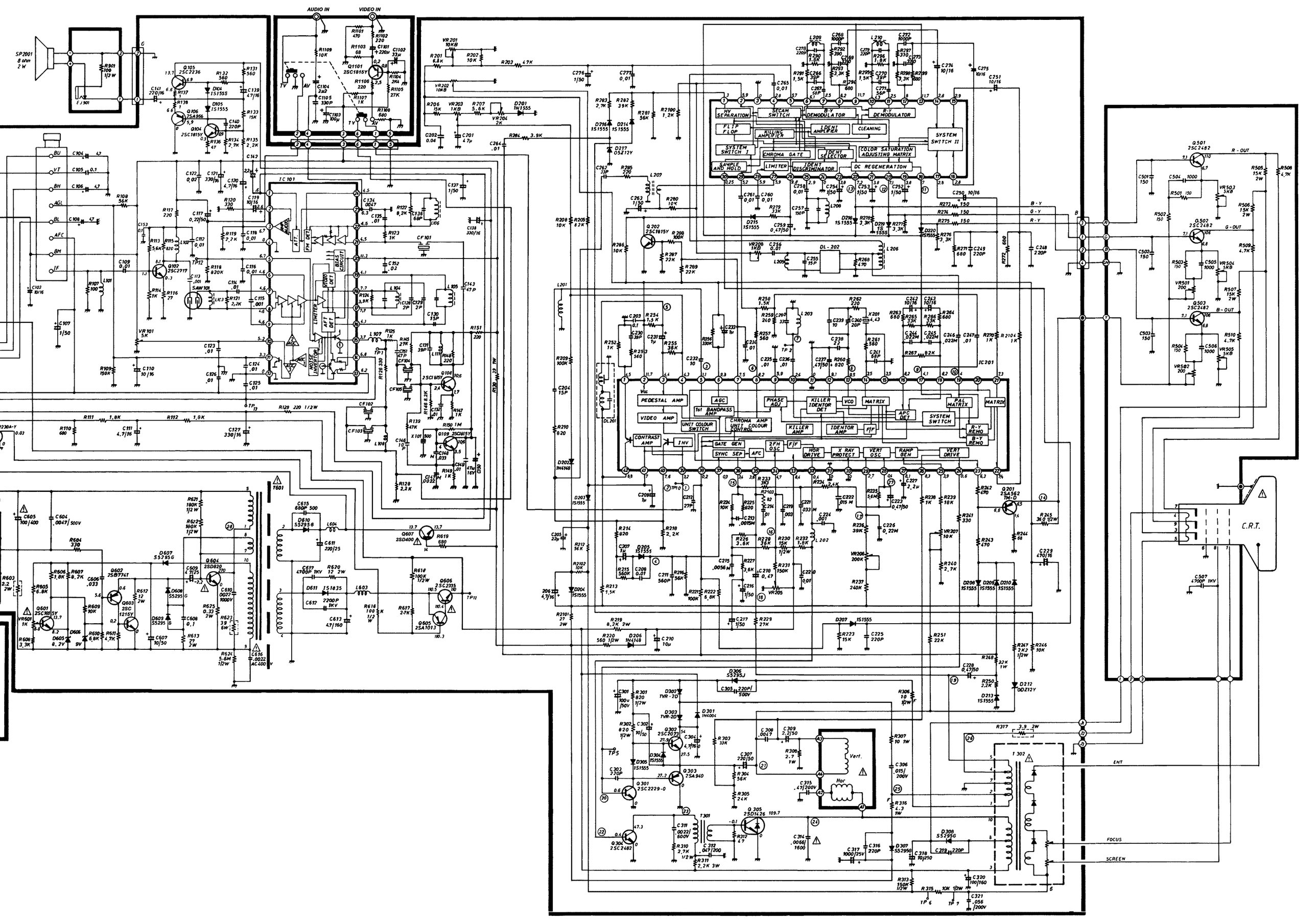
AUDIO IN
VIDEO IN
SP2001 8 ohm 2 W
TC 101
IC 201
T601
T 302
T301
C.R.T.
HV SEPARATION
SECAM SWITCH
B-Y DEMODULATOR
R-Y DEMODULATOR
FLIP FLOP
KILLING AMPLIFIER
IDENT AMPLIFIER
CLEANING
SYSTEM SWITCH I
CHROMA GATE
IDENT SELECTOR
COLOR SATURATION ADJUSTING MATRIX
SYSTEM SWITCH II
SAMPLE AND HOLD
LIMITER
IDENT DISCRIMINATOR
DC REGENERATION
PEDESTAL AMP
AGC
PHASE ADJ
KILLER IDENTOR DET
VCO
MATRIX
PAL MATRIX
VIDEO AMP
1st BANDPASS AMP
UNIT COLOUR SWITCH
CHROMA AMP UNIT COLOUR CONTROL
KILLER AMP
IDENTOR AMP
F/F
APC DET
SYSTEM SWITCH
R-Y REMO
B-Y REMO
CONTRAST AMP
INV
GATE GEN
SYNC SEP
AFC
2FH OSC
HOR DRIVE
X RAY PROTECT
VERT OSC
RAMP GEN
VERT DRIVE
R - OUT
G - OUT
B - OUT
B - Y
G - Y
R - Y
EHT
FOCUS
SCREEN
Vert.
Hor

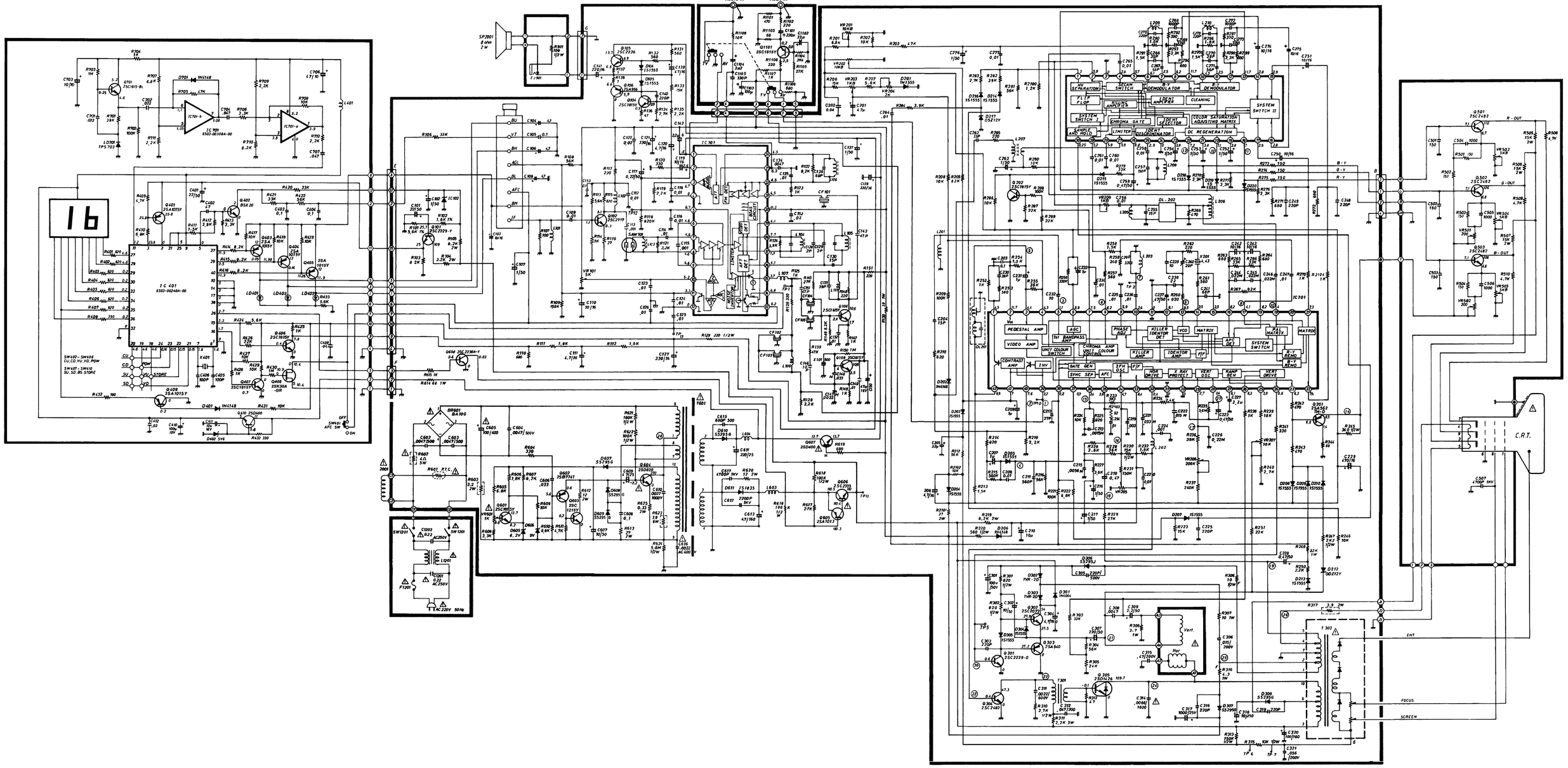
16
AUDIO IN
VIDEO IN
SP 2001
8 ohm
2 W
IC 401
6503-002404-00
IC 101
IC 701
6503-00308A-00
IC 201
SW401 - SW406
CU, CD, VU, VD, POW
SW407 - SW410
SU, SD, BS, STORE
PEDESTAL AMP
VIDEO AMP
CONTRAST AMP
AGC
PHASE ADJ
KILLER IDENTOR DET
VCO
MATRIX
APC DET
SYSTEM SWITCH
KILLER AMP
TOP IDENTOR AMP
FIF
HOR DRIVE
X RAY PROTECT
VERT OSC
RAMP GEN
VERT DRIVE
GATE GEN
SYNC SEP
AFC
5FH OSC
UNIT COLOUR SWITCH
CHROMA AMP UNIT COLOUR SWITCH
R-Y REMO
B-Y REMO
MATRDI
SCAN SWITCH
B-Y DEMODULATOR
R-Y DEMODULATOR
CLEANING
SYSTEM SWITCH 1
SYSTEM SWITCH 11
CHROMA GATE
COLOR SATURATION ADJUSTING MATRIX
LIMITER
IDENT DISCRIMINATOR
TOP IDENT SELECTOR
DC REGENERATION
SAMPLE AND HOLD
DL-202
R-OUT
G-OUT
B-OUT
B-Y
G-Y
R-Y
C.R.T.
EHT
FOCUS
SCREEN
Vert.
Hor.
T 302
T 301
AC220V 50Hz